YANMAR

PARTS CATALOG

0CR10-M53500EN

Last update Mar., 2009

Directions for the Parts Catalog.

1.The parts stipulated in this Parts Catalog are not necessarily standard equipped parts.
2.Parts may change without prior notice.
3.The following is an example of the Parts Catalog format.

0CF10-E21601 29. FUEL INJECTION PUMP (W/BOOST)

(A)=4JH—DT (D)=4JH—DTZA
(B)=4JH—DTZ (E)=4JH—DTZY
(C)=4JH—DTZP (F)=

REF.	LEV.	PARTSNo.	DESCRIPTION	QTY (A)	(B)	(C)	(D)	(E)	(F)	I	R
1		729595-51390	FUEL INJECTION PUMP	1	1	1	1	1			1
1—1	1	729595-51391	FUEL INJECTION PUMP	1	1	1	1	1			N 1
	(A=E00185)	(B=E00200)									
3	2	26022-060162	SCREW M 6X16	9	9	9	9	9			
I 3—1	2	26022-060162	SCREW M 6X16	4	4	4	4	4			K
	(A=E00156)	(B=E00156)	(C=E00156) (D=E00156)	(E=E00156)							
4	2	129470-51040	CAMSHFT	9	9	9	9	9			
5	2	122710-51050	BEARING.ROLLER	9	9	9	9	9			
6	2	129470-51060	RETAINER	9	9	9	9	9			

Remarks
(1) BOOST COMPEMSATOR TYPE.
OPTIONAL PART. TO E/#00155
(4JH-DT, 4JH-DTZ)

①Ref. No.

The Ref. No. listed may not be in accordance with the illustration Ref. No.

(Ex.) Illustration No. 1 — List Ref No. 1 (Before change) → 1-1 (After change)

For interchangeable symbols N, R and K, illustrations for new parts may be abbreviated.

②Lev. (Level)

Level indication
The numbers below indicate the level of relativity towards the main part.
1 ----- Main parts (Assembly parts)
2 ----- Sub component included in " 1 ".
3 ----- Sub component included in " 2 ".
Note) Parts that are not for sale are partially illustrated but not listed.

③Change Mark

The "I" indicates parts that were newly changed.

④Interchangeability Mark

When a part change takes place, one of the following interchangeability symbols is indicated beside the part.

Symbol	Interchangeability	Contents note
N	Old ←Yes / No→ New	New Part is interchangeable for Old Part but Old Part is not interchangeable for New Part.
Q	Old ←No / Yes→ New	New Part is not interchangeable for Old Part but Old Part is interchangeable for New Part.
R	Old ←Yes / Yes→ New	New/ Old Parts are both interchangeable.
S	Old ←No / No→ New	New/ Old Parts are both not interchangeable.
W		Part discontinued.
Z		Part newly added.
F		Not interchangeable by a single part but interchangeable together with related parts.
K		Changes only for used parts quantities.

⑤Effective Machine No.

When a part changes, the effective Machine No. will be indicated in the (A)-(F) column.

Product Symbol	Product No.	Product Symbol	Product No.
C	Clutch No. Compressor No.	F	Machine No. (Agricultural Equip.)
D	Drive No.	M	Machine No.
E	Engine No.	Note 1)	Date

Note 1) A date may follow the symbol. (Ex.) 1996.01
Note 2) " XXX " are for parts that could not be predicted or for engine models that could not be identified.
Note 3) (A=E/#00185) is the E/# (Engine Serial Number) for the column (A) model (in this case 4JH-DT) after the parts design change.

⑥Remarks Mark

Figures or alphabets (symbols) are entered in the remarks column.
The comments (remarks) on parts that are indicated at the bottom of the illustration are the same symbols as those stated above.

Contents

Fig. No.	Fig. Name
L70EE-(DE(P),DEG)15A	
1.	CYLINDER BLOCK
2.	CYLINDER HEAD & BONNET
3.	AIR CLEANER
4.	MUFFLER
5.	CRANKSHAFT,PISTON & CAMSHAFT
6.	LUB.OIL PUMP & GOVERNOR
7.	COOLING & STARTING DEVICE
8.	FUEL INJECTION PUMP
9.	FUEL TANK & FUEL LINE
10.	STARTING MOTOR & DYNAMO
11.	TOOL,LABEL & GASKET SET

Fig. No.	Fig. Name

Fig.1. CYLINDER BLOCK

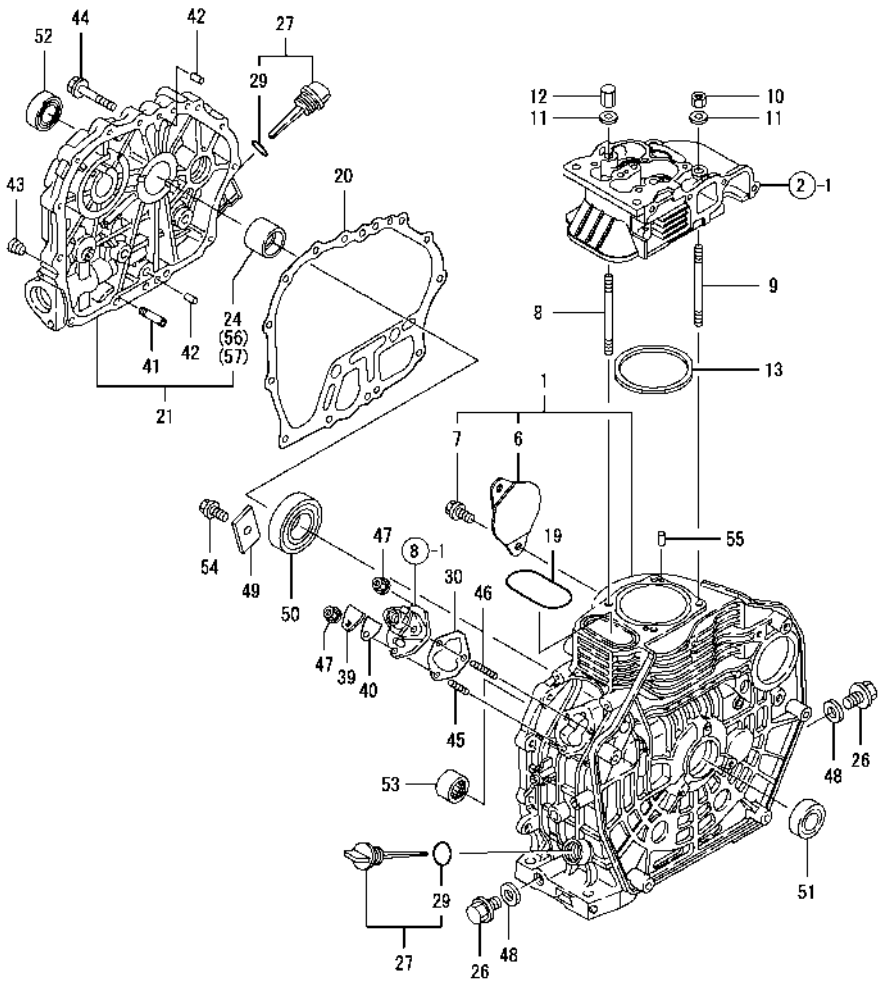

(A)=L70EE-DE15A (D)=
(B)=L70EE-DEP15A (E)=
(C)=L70EE-DEG15A (F)=

No.	Lev.	Parts No.	Description	Q'ty (A)	(B)	(C)	(D)	(E)	(F)	I	R
1	1	714871-01560	BLOCK ASSY, CYLINDER	1	1	1					
6	2	114350-01700	COVER	1	1	1					
7	2	26106-100122	BOLT, M10X 12 PLATED	2	2	2					
8	1	114350-01200	BOLT, HEAD	2	2	2					
9	1	114350-01210	BOLT, HEAD	2	2	2					
10	1	114350-01220	NUT, CYLINDER HEAD	2	2	2					
11	1	105225-01240	WASHER	4	4	4					
12	1	114350-01250	NUT, CYLINDER HEAD	2	2	2					
13	1	114871-01330	GASKET SET, HEAD	1	1	1					
19	1	114350-01380	O-RING	1	1	1					
20	1	114350-01412	GASKET, CRANK CASE	1	1	1					
21	1	114368-01453	COVER, CRANK CASE	1	1	1					
24	2	114350-02100	BEARING, MAIN	1	1	1					1
26	1	105425-01690	PLUG, 16	2	2	2					
27	1	114699-01760	CAP ASSY	2	2	2					
29	2	114299-01950	O-RING, 18	2	2	2					
30	1	114250-01800	SHIM SET	1	1	1					
39	1	114250-01830	COVER	1	1	1					
40	1	114250-01841	GASKET	1	1	1					
41	1	114250-35150	PIPE, OIL INLET	1	1	1					
42	1	114270-01600	PIN, M8X12	2	2	2					
43	1	23876-010000	PLUG, R01	1	1	1					
44	1	26106-080352	BOLT, M8X 35 PLATED	15	15	15					
45	1	26226-060182	STUD, M6X 18	1	1	1					
46	1	26226-060222	STUD, M6X 22	2	2	2					
47	1	26366-060002	NUT, M6	3	3	3					
48	1	22190-160002	WASHER, SEAL 16	2	2	2					
49	1	114299-02030	RETAINER, BEARING	1	1	1					
50	1	114350-02113	BEARING, B35-135G3C3	1	1	1					
51	1	160110-02220	SEAL, OIL	1	1	1					
52	1	160110-02220	SEAL, OIL	1	1	1					
53	1	24162-152112	BEARING, 152112	1	1	1					
54	1	26106-080122	BOLT, M8X 12 PLATED	1	1	1					
55	1	22312-040080	PIN, PARALLEL M4X 8	2	2	2					
56	1	114350-02200	BEARING, 0.25 US	1	1	1					2
57	1	114350-02210	BEARING, 0.50 US	1	1	1					2

Remarks
(1) REPAIR PART.
(2) UNDER-SIZED PART.

N:Old $\xleftrightarrow[\text{No}]{\text{Yes}}$ New, Q:Old $\xleftrightarrow[\text{Yes}]{\text{No}}$ New, R:Old $\xleftrightarrow[\text{Yes}]{\text{Yes}}$ New, S:Old $\xleftrightarrow[\text{No}]{\text{No}}$ New, W:Add, Z:Discontinued, F:Interchangeable by set, K:Q'ty Change

Copyright (C) YANMAR CO., LTD. All RightsReserved.

Fig.2. CYLINDER HEAD & BONNET

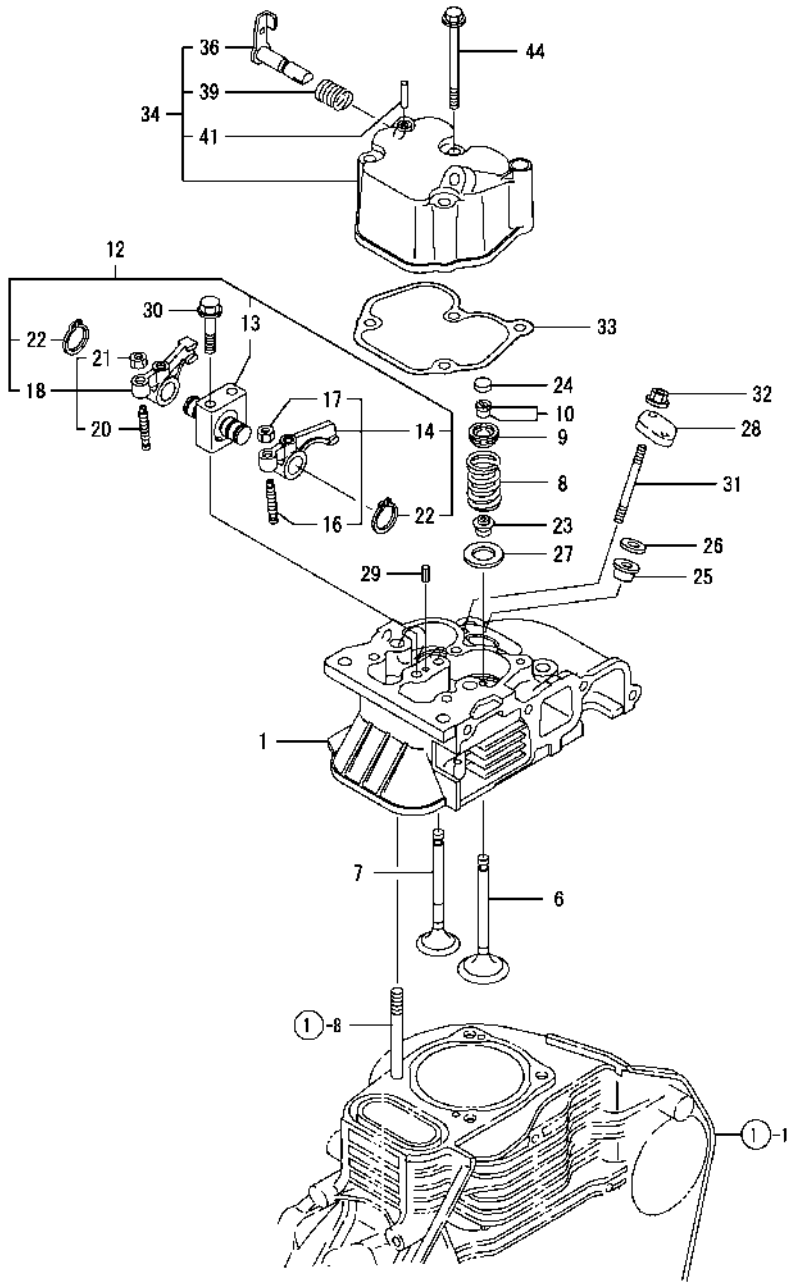

(A)=L70EE-DE15A (D)=
(B)=L70EE-DEP15A (E)=
(C)=L70EE-DEG15A (F)=

No.	Lev.	Parts No.	Description	Q'ty (A)	(B)	(C)	(D)	(E)	(F)	I	R
1	1	114871-11020	HEAD ASSY, CYLINDER	1	1	1					
6	1	114871-11100	VALVE, INTAKE	1	1	1					
7	1	114871-11110	VALVE, EXHAUST	1	1	1					
8	1	114350-11120	SPRING, VALVE	2	2	2					
9	1	101158-11180	RETAINER, SPRING	2	2	2					
10	1	27310-060001	COTTER, 6	2	2	2					
12	1	114771-11250	SUPPORT ASSY, ARM	1	1	1					
13	2	114771-11260	SUPPORT, ROCKER ARM	1	1	1					
14	2	114771-11650	ARM, ROCKER	1	1	1					
16	3	114250-11240	SCREW, VALVE ADJUST	1	1	1					
17	3	26856-060002	NUT, M6	1	1	1					
18	2	114771-11660	ARM, ROCKER	1	1	1					
20	3	114250-11240	SCREW, VALVE ADJUST	1	1	1					
21	3	26856-060002	NUT, M6	1	1	1					
22	2	22242-000120	RING, 12	2	2	2					
23	1	114350-11340	SEAL, VALVE STEM	2	2	2					
24	1	105010-11490	CAP, VALVE	2	2	2					
25	1	114771-11461	GASKET, NOZZLE	1	1	1					
26	1	114771-11470	SPACER, NOZZLE	1	1	1					
27	1	114250-11600	WASHER	2	2	2					
28	1	114250-11901	RETAINER, NOZZLE	1	1	1					
29	1	22351-040008	PIN, SPRING 4.0X 8	1	1	1					
30	1	26106-060452	BOLT, M6X 45 PLATED	2	2	2					
31	1	26226-060552	STUD, M6X 55	2	2	2					
32	1	26366-060002	NUT, M6	2	2	2					
33	1	114771-11310	GASKET, BONNET	1	1	1					
34	1	114771-11950	BONNET ASSY, HEAD	1	1	1					
36	2	114250-03591	LEVER ASSY	1	1	1					
39	2	114250-03640	SPRING,DECOMPRESSION	1	1	1					
41	2	22312-030160	PIN, PARALLEL M3X16	1	1	1					
44	1	26106-060552	BOLT, M6X 55 PLATED	3	3	3					

N:Old $\xleftrightarrow[\text{No}]{\text{Yes}}$ New, Q:Old $\xleftrightarrow[\text{Yes}]{\text{No}}$ New, R:Old $\xleftrightarrow[\text{Yes}]{\text{Yes}}$ New, S:Old $\xleftrightarrow[\text{No}]{\text{No}}$ New, W:Add, Z:Discontinued, F:Interchangeable by set, K:Q'ty Change

Copyright (C) YANMAR CO., LTD. All RightsReserved.

Fig.3. AIR CLEANER

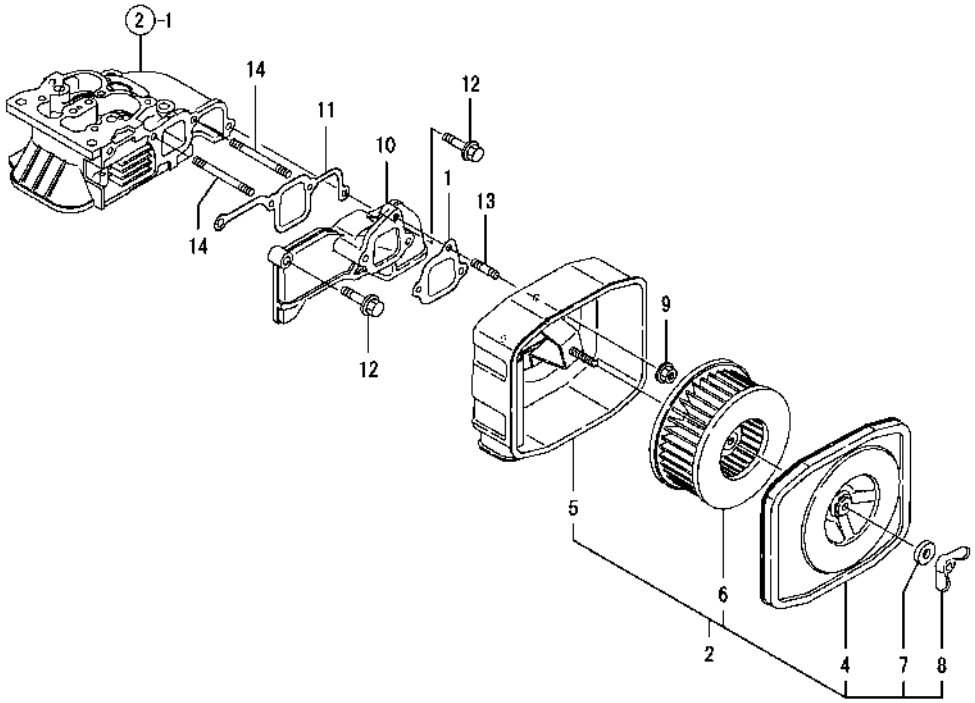

(A)=L70EE-DE15A (D)=
(B)=L70EE-DEP15A (E)=
(C)=L70EE-DEG15A (F)=

No.	Lev.	Parts No.	Description	Q'ty (A)	(B)	(C)	(D)	(E)	(F)	I	R
1	1	114250-12211	GASKET, AIR CLEANER	1	1	1					
2	1	714250-12560	CLEANER ASSY, AIR	1	1	1					
4	2	114250-12520	COVER, AIR CREANER	1	1	1					
5	2	114250-12530	CASE ASSY, CLEANER	1	1	1					
6	2	114250-12580	ELEMENT	1	1	1					
7	2	114250-12560	WASHER, SEAL M6	1	1	1					
8	2	114250-12550	NUT, WING M6	1	1	1					
9	1	114250-12300	NUT	3	3	3					
10	1	114399-12010	PIPE, AIR INTAKE	1	1	1					
11	1	114350-12202	GASKET, AIR INTAKE	1	1	1					
12	1	26106-060252	BOLT, M6X 25 PLATED	2	2	2					
13	1	26226-060142	STUD, M6X 14	1	1	1					
14	1	26226-060552	STUD, M6X 55	2	2	2					

N:Old $\xleftrightarrow[\text{No}]{\text{Yes}}$ New, Q:Old $\xleftrightarrow[\text{Yes}]{\text{No}}$ New, R:Old $\xleftrightarrow[\text{Yes}]{\text{Yes}}$ New, S:Old $\xleftrightarrow[\text{No}]{\text{No}}$ New, W:Add, Z:Discontinued, F:Interchangeable by set, K:Q'ty Change

Copyright (C) YANMAR CO., LTD. All RightsReserved.

Fig.4. MUFFLER

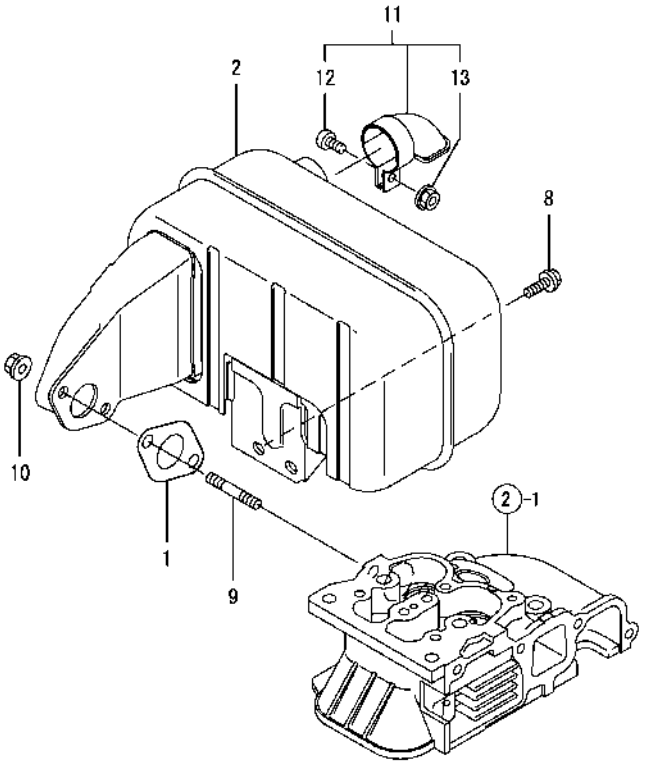

(A)=L70EE-DE15A (D)=
(B)=L70EE-DEP15A (E)=
(C)=L70EE-DEG15A (F)=

No.	Lev.	Parts No.	Description	Q'ty (A)	(B)	(C)	(D)	(E)	(F)	I	R
1	1	114250-13201	GASKET, MUFFLER	1	1	1					
2	1	114870-13551	MUFFLER ASSY	1	1	1					
8	1	26106-060122	BOLT, M6X 12 PLATED	2	2	2					
9	1	26216-080182	STUD, M8X 18	2	2	2					
10	1	26306-080002	NUT, M8	2	2	2					
11	1	114288-13800	EXTENSION ASSY	1	1	1					
12	2	26554-060182	SCREW, M6X18	1	1	1					
13	2	26367-060002	NUT, M6	1	1	1					

N:Old $\xleftrightarrow[\text{No}]{\text{Yes}}$ New, Q:Old $\xleftrightarrow[\text{Yes}]{\text{No}}$ New, R:Old $\xleftrightarrow[\text{Yes}]{\text{Yes}}$ New, S:Old $\xleftrightarrow[\text{No}]{\text{No}}$ New, W:Add, Z:Discontinued, F:Interchangeable by set, K:Q'ty Change

Copyright (C) YANMAR CO., LTD. All RightsReserved.

Fig.5. CRANKSHAFT,PISTON & CAMSHAFT

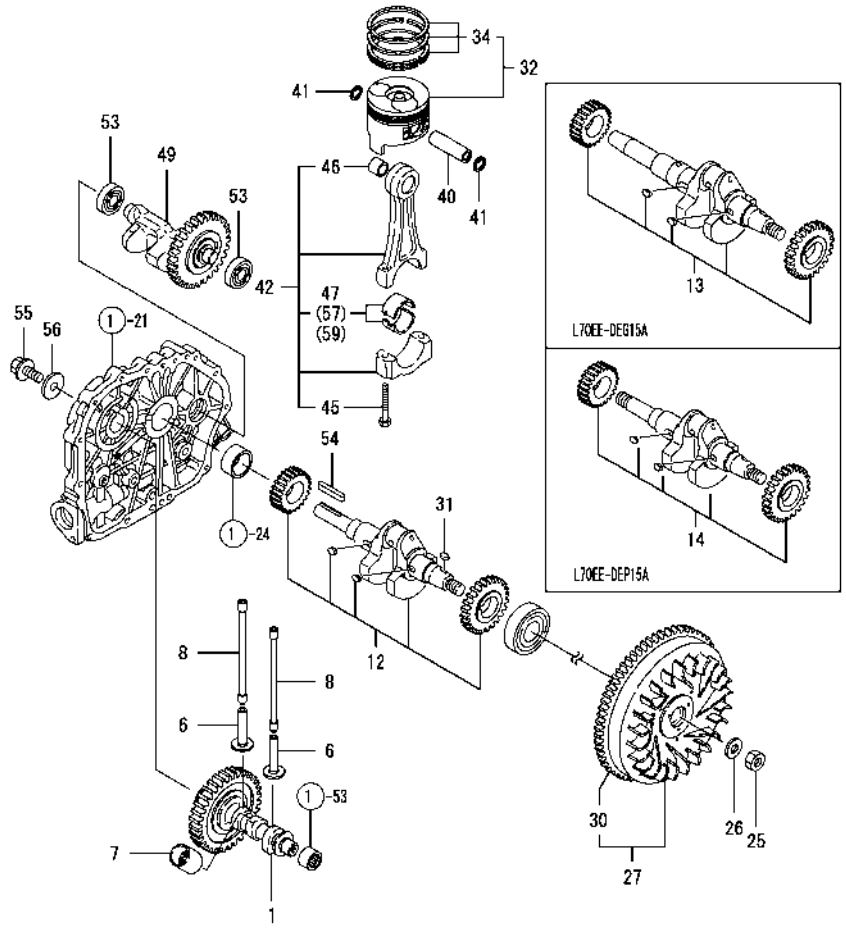

(A)=L70EE-DE15A (D)=
(B)=L70EE-DEP15A (E)=
(C)=L70EE-DEG15A (F)=

No.	Lev.	Parts No.	Description	Q'ty (A)	(B)	(C)	(D)	(E)	(F)	I	R
1	1	714880-14580	CAMSHAFT ASSY	1	1	1					
6	1	114250-14200	TAPPET	2	2	2					
7	1	114771-14260	TAPPET	1	1	1					
8	1	114350-14450	ROD ASSY, PUSH	2	2	2					
12	1	714876-21730	CRANKSHAFT ASSY	1							
13	1	714879-21730	CRANKSHAFT ASSY			1					
14	1	714878-21730	CRANKSHAFT ASSY		1						
25	1	103854-01221	NUT, CYLINDER HEAD	1	1	1					
26	1	114250-21550	WASHER	1	1	1					
27	1	114881-21590	FLYWHEEL ASSY	1	1	1					
30	2	114362-21600	GEAR, RING	1	1	1					
31	1	22512-040120	KEY, 4X 12	1	1	1					
32	1	714872-22720	PISTON ASSY, D	1	1	1					
34	2	714870-22500	RING SET, PISTON	1	1	1					
40	1	114399-22300	PIN, PISTON D=21	1	1	1					
41	1	22252-000210	RING, 21	2	2	2					
42	1	714380-23700	ROD ASSY, CONNECTING	1	1	1					
45	2	118200-23200	BOLT, CONNECTING ROD	2	2	2					
46	2	114380-23100	BEARING, PISTON PIN	1	1	1					
47	2	714380-23600	BEARING, CRANK PIN	1	1	1					
49	1	714870-28511	SHAFT ASSY, BALANCER	1	1	1					
53	1	24101-062024	BEARING, BALL 6202	2	2	2					
54	1	160842-21150	KEY, 6.3X50	1							
55	1	160842-21250	BOLT, 7/16-20UNF	1							
56	1	160842-21260	WASHER	1							
57	1	714380-23610	METAL ASSY, 0.25	1	1	1					1
59	1	714380-23620	BEARING, 0.50 US	1	1	1					2

Remarks
(1)UNDER-SIZE(U.S=0.25)PART.
(2)UNDER-SIZE(U.S=0.50)PART.

N:Old $\xleftrightarrow[\text{No}]{\text{Yes}}$ New, Q:Old $\xleftrightarrow[\text{Yes}]{\text{No}}$ New, R:Old $\xleftrightarrow[\text{Yes}]{\text{Yes}}$ New, S:Old $\xleftrightarrow[\text{No}]{\text{No}}$ New, W:Add, Z:Discontinued, F:Interchangeable by set, K:Q'ty Change

Copyright (C) YANMAR CO., LTD. All RightsReserved.

Fig.6. LUB.OIL PUMP & GOVERNOR

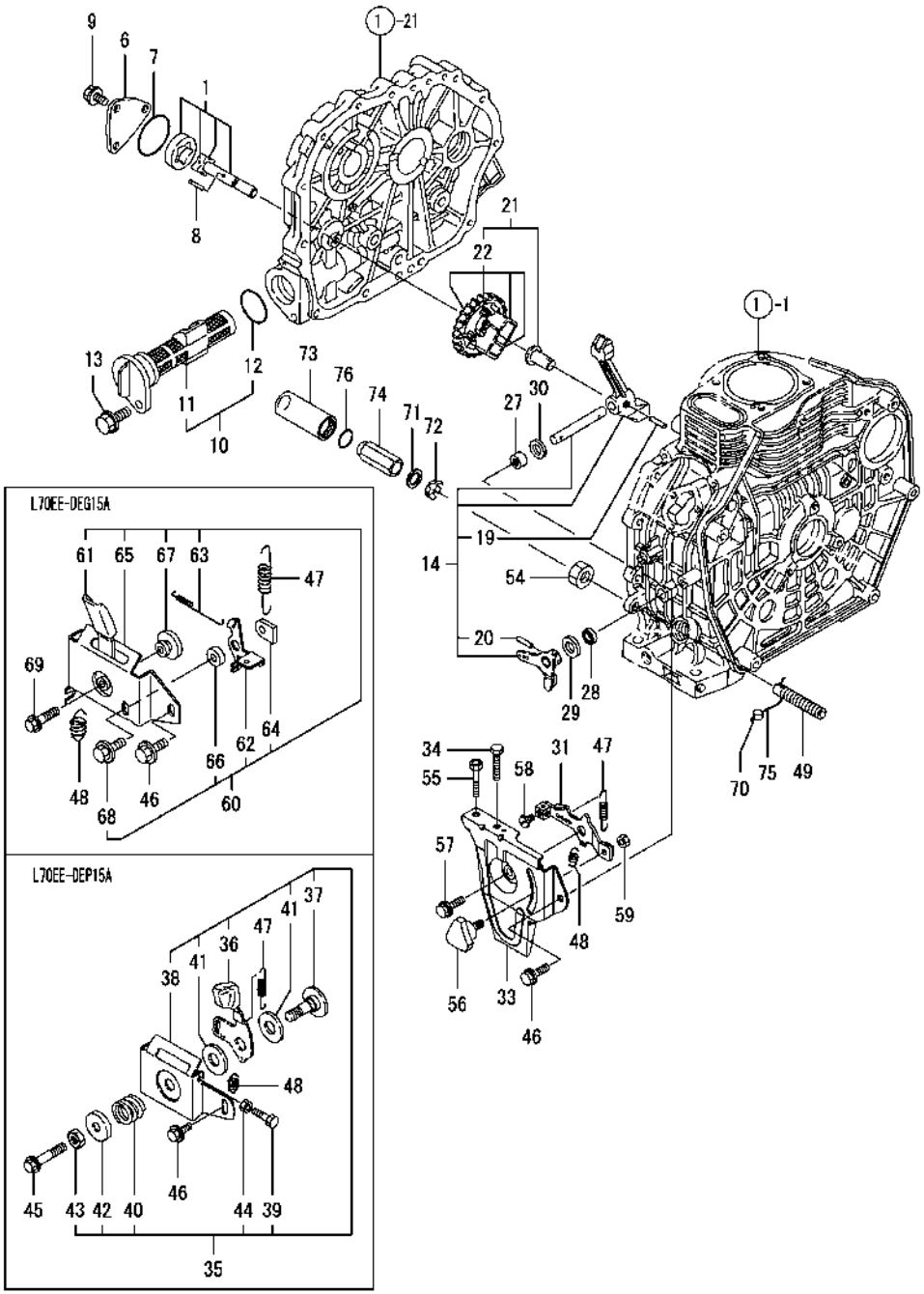

(A)=L70EE-DE15A (D)=
(B)=L70EE-DEP15A (E)=
(C)=L70EE-DEG15A (F)=

No.	Lev.	Parts No.	Description	Q'ty (A)	(B)	(C)	(D)	(E)	(F)	I	R
1	1	114250-32010	PUMP ASSY, OIL	1	1	1					
6	1	114250-32070	COVER	1	1	1					
7	1	103338-32570	O-RING	1	1	1					
8	1	22312-030160	PIN, PARALLEL M3X16	1	1	1					
9	1	26476-060142	SCREW, TAPPING M6X14	3	3	3					
10	1	114250-35110	FILTER ASSY, OIL	1	1	1					
11	2	114250-35070	FILTER, OIL	1	1	1					
12	2	24341-000224	O-RING, 1AS22.4	1	1	1					
13	1	26106-060162	BOLT, M6X 16 PLATED	1	1	1					
14	1	714350-61500	LEVER ASSY, GOVERNOR	1	1	1					
19	2	22322-030200	PIN, TAPER 3X20	1	1	1					
20	2	22322-030200	PIN, TAPER 3X20	1	1	1					
21	1	714770-61100	GOVERNOR ASSY	1	1	1					
22	2	114770-61220	WEIGHT ASSY,GOVERNOR	1	1	1					
27	1	114770-61520	BEARING, NEEDLE	2	2	2					
28	1	114770-61600	SEAL, OIL	1	1	1					
29	1	114770-61610	WASHER, THRUST	1	1	1					
30	1	114770-61190	WASHER	1	1	1					
31	1	114250-66050	HANDLE, REGULATOR	1							
33	1	114299-66100	BRACKET	1							
34	1	114250-66440	BOLT, ADJUSTING	1							
35	1	183250-66500	BRACKET ASSY		1						
36	2	183250-66050	HANDLE, REGULATOR		1						
37	2	183250-66070	SHAFT, HANDLE		1						
38	2	183250-66100	BRACKET, RADIATOR		1						
39	2	114250-66440	BOLT, ADJUSTING		1						
40	2	104200-66820	SPRING		1						
41	2	104200-66830	PLATE, FRICTION		2						
42	2	104200-66850	WASHER		1						
43	2	26696-100002	NUT, LOCK M10		1						
44	2	26757-060002	NUT, LOCK M6		1						
45	1	26106-060452	BOLT, M6X 45 PLATED		1						
46	1	26476-060142	SCREW, TAPPING M6X14	1	1	1					
47	1	114870-66010	SPRING, REGULATOR	1	1	1					
48	1	114250-66200	SPRING, RETURN	1	1	1					
49	1	114871-66550	LIMITER ASSY, FUEL	1	1	1					
54	1	26776-100002	NUT, LOCK M10	1	1	1					
55	1	102100-67080	BOLT, ADJUSTING	1							
56	1	160725-78350	KNOB	1							
57	1	26106-060142	BOLT, M6X 14 PLATED	1							
58	1	26117-040088	BOLT M 4X 8 PLATED	1							
59	1	26347-060002	NUT, M6	1							
60	1	183250-66511	BRACKET ASSY, HANDLE			1					
61	2	183250-66301	HANDLE			1					
62	2	183250-66321	LEVER, LOCK			1					
63	2	183250-66331	SPRING			1					
64	2	183250-66341	NUT, LOCK			1					
65	2	183250-66351	BRACKET			1					
66	2	183250-66361	COLLAR			1					
67	2	183250-66371	COLLAR			1					
68	2	26106-060162	BOLT, M6X 16 PLATED			1					

N:Old $\xleftrightarrow[\text{No}]{\text{Yes}}$ New, Q:Old $\xleftrightarrow[\text{Yes}]{\text{No}}$ New, R:Old $\xleftrightarrow[\text{Yes}]{\text{Yes}}$ New, S:Old $\xleftrightarrow[\text{No}]{\text{No}}$ New, W:Add, Z:Discontinued, F:Interchangeable by set, K:Q'ty Change

++ CONTINUE ++

Copyright (C) YANMAR CO., LTD. All RightsReserved.

Fig.6. LUB.OIL PUMP & GOVERNOR

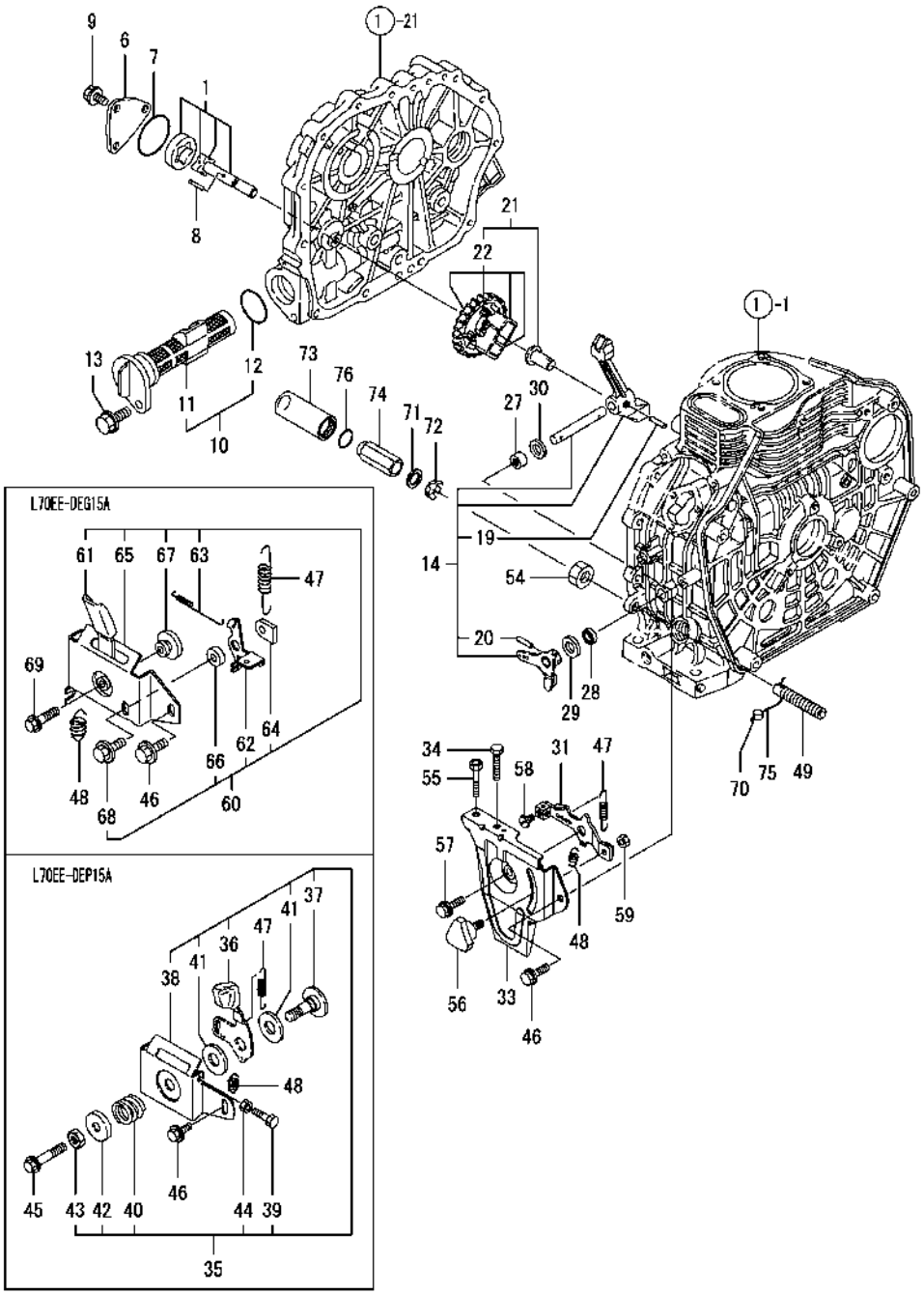

(A)=L70EE-DE15A (D)=
(B)=L70EE-DEP15A (E)=
(C)=L70EE-DEG15A (F)=

No.	Lev.	Parts No.	Description	Q'ty (A)	(B)	(C)	(D)	(E)	(F)	I	R
69	1	26106-060202	BOLT, M6X 20 PLATED			1					
70	1	135210-61090	LEAD	1	1	1					
71	1	114771-61800	WASHER, 10	1	1	1					
72	1	114771-61820	PLATE	1	1	1					
73	1	114771-61900	PROTECTOR	1	1	1					
74	1	114771-61930	NUT, CAP M10	1	1	1					
75	1	22451-060000	WIRE, 0.6	1	1	1					
76	1	24311-000125	O-RING, 1AP12.5	1	1	1					

N:Old $\xleftrightarrow[\text{No}]{\text{Yes}}$ New, Q:Old $\xleftrightarrow[\text{Yes}]{\text{No}}$ New, R:Old $\xleftrightarrow[\text{Yes}]{\text{Yes}}$ New, S:Old $\xleftrightarrow[\text{No}]{\text{No}}$ New, W:Add, Z:Discontinued, F:Interchangeable by set, K:Q'ty Change

Copyright (C) YANMAR CO., LTD. All RightsReserved.

Fig.7. COOLING & STARTING DEVICE

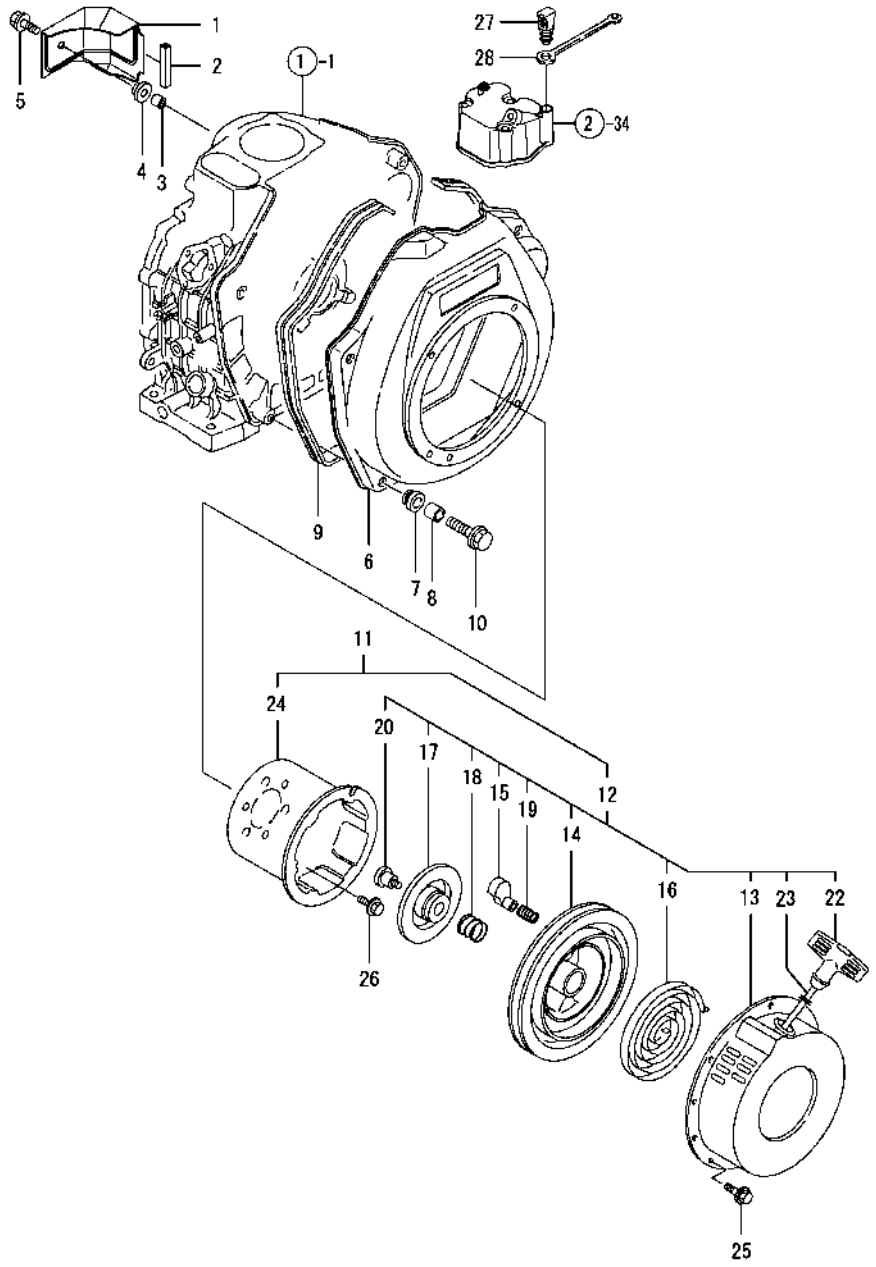

(A)=L70EE-DE15A (D)=
(B)=L70EE-DEP15A (E)=
(C)=L70EE-DEG15A (F)=

No.	Lev.	Parts No.	Description	Q'ty (A)	(B)	(C)	(D)	(E)	(F)	I	R
1	1	114870-45201	COVER	1	1	1					
2	1	114350-45320	RUBBER, SEAL	1	1	1					
3	1	114350-45340	COLLAR	1	1	1					
4	1	183720-55210	GROMMET	1	1	1					
5	1	26106-060202	BOLT, M6X 20 PLATED	1	1	1					
6	1	114360-45101	CASE, COOLING FAN	1	1	1					
7	1	114250-45301	ABSORBER	4	4	4					
8	1	114250-45310	COLLAR	4	4	4					
9	1	114250-45330	SEAL, FAN CASE L=875	1	1	1					
10	1	114370-45351	BOLT	4	4	4					
11	1	114880-76051	STARTER ASSY, RECOIL	1	1	1					
12	2	114880-76251	STARTER ASSY, RECOIL	1	1	1					
13	3	114880-76511	CASE, STARTER	1	1	1					
14	3	114880-76520	REEL	1	1	1					
15	3	114870-76530	RATCHET	2	2	2					
16	3	114870-76540	SPRING, SPIRAL	1	1	1					
17	3	114880-76550	GUIDE, RATCHET	1	1	1					
18	3	114870-76560	SPRING, FRICTION	1	1	1					
19	3	114870-76570	SPRING, RETURN	2	2	2					
20	3	114870-76580	SCREW	1	1	1					
22	3	114870-76620	KNOB, STARTER	1	1	1					
23	3	114870-76630	ROPE, STARTER	1	1	1					
24	2	114350-76591	PULLEY, STARTER	1	1	1					
25	1	26106-060082	BOLT, M6X 8 PLATED	4	4	4					
26	1	26106-060122	BOLT, M6X 12 PLATED	3	3	3					
27	1	114250-76600	PLUNGER	1	1	1					
28	1	114250-76610	HOLDER, PLUNGER	1	1	1					

N:Old $\xleftarrow[\text{No}]{\text{Yes}}$ New, Q:Old $\xleftarrow[\text{Yes}]{\text{No}}$ New, R:Old $\xleftarrow[\text{Yes}]{\text{Yes}}$ New, S:Old $\xleftarrow[\text{No}]{\text{No}}$ New, W:Add, Z:Discontinued, F:Interchangeable by set, K:Q'ty Change

Copyright (C) YANMAR CO., LTD. All RightsReserved.

Fig.8. FUEL INJECTION PUMP

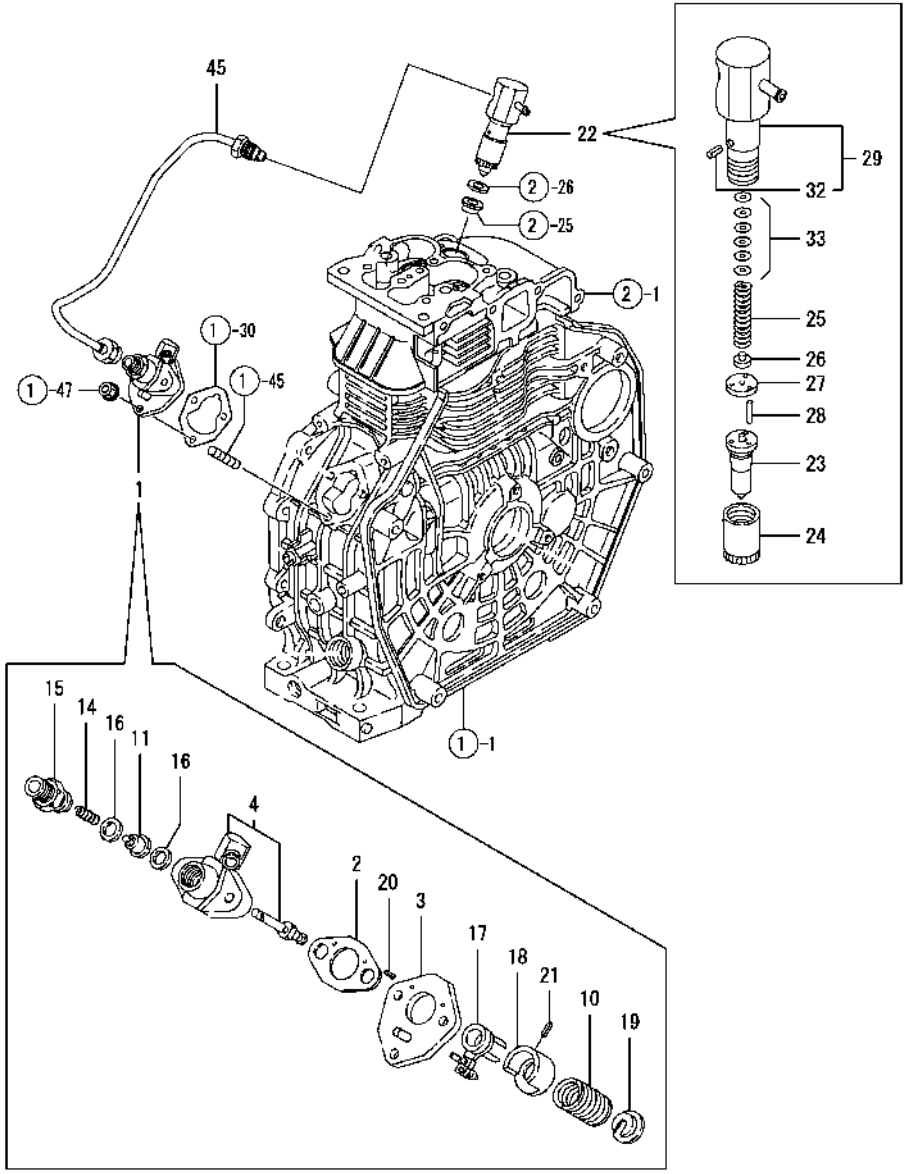

(A)=L70EE-DE15A (D)=
(B)=L70EE-DEP15A (E)=
(C)=L70EE-DEG15A (F)=

No.	Lev.	Parts No.	Description	Q'ty (A)	(B)	(C)	(D)	(E)	(F)	I	R
1	1	714875-51100	PUMP ASSY, INJECTION	1	1	1					
2	2	105546-51020	GASKET	1	1	1					
3	2	114250-51080	PLATE	1	1	1					
4	2	114650-51100	BODY ASSY, PUMP	1	1	1					
10	2	114250-51160	SPRING, PLUNGER	1	1	1					
11	2	114650-51300	VALVE ASSY, DELIVERY	1	1	1					
14	2	105546-51330	SPRING, DELIVERY	1	1	1					
15	2	114250-51340	HOLDER, DELIVERY	1	1	1					
16	2	124550-51350	GASKET, DELIVERY	2	2	2					
17	2	114250-51600	LEVER ASSY, CONTROL	1	1	1					
18	2	114250-51640	SEAT, SPRING A	1	1	1					
19	2	114250-51650	SEAT, SPRING B	1	1	1					
20	2	22351-020006	PIN, SPRING 2.0X 6	2	2	2					
21	2	22351-030008	PIN, SPRING 3.0X 8	1	1	1					
22	1	714875-53100	VALVE ASSY,INJECTION	1	1	1					
23	2	114871-53001	VALVE ASSY,INJECTION	1	1	1					
24	2	119593-53080	NUT, NOZZLE	1	1	1					
25	2	114250-53120	SPRING, NOZZLE	1	1	1					
26	2	119593-53130	SEAT, SPRING	1	1	1					
27	2	114775-53140	SPACER, VALVE STOP	1	1	1					
28	2	114775-53210	PIN	2	2	2					
29	2	114875-53100	HOLDER ASSY, NOZZLE	1	1	1					
32	3	114250-53331	PIN	1	1	1					
33	2	114250-53400	SHIM SET	1	1	1					
45	1	114871-59803	PIPE ASSY, INJECTION	1	1	1					

N:Old $\xleftrightarrow[\text{No}]{\text{Yes}}$ New, Q:Old $\xleftrightarrow[\text{Yes}]{\text{No}}$ New, R:Old $\xleftrightarrow[\text{Yes}]{\text{Yes}}$ New, S:Old $\xleftrightarrow[\text{No}]{\text{No}}$ New, W:Add, Z:Discontinued, F:Interchangeable by set, K:Q'ty Change

Copyright (C) YANMAR CO., LTD. All RightsReserved.

Fig.9. FUEL TANK & FUEL LINE

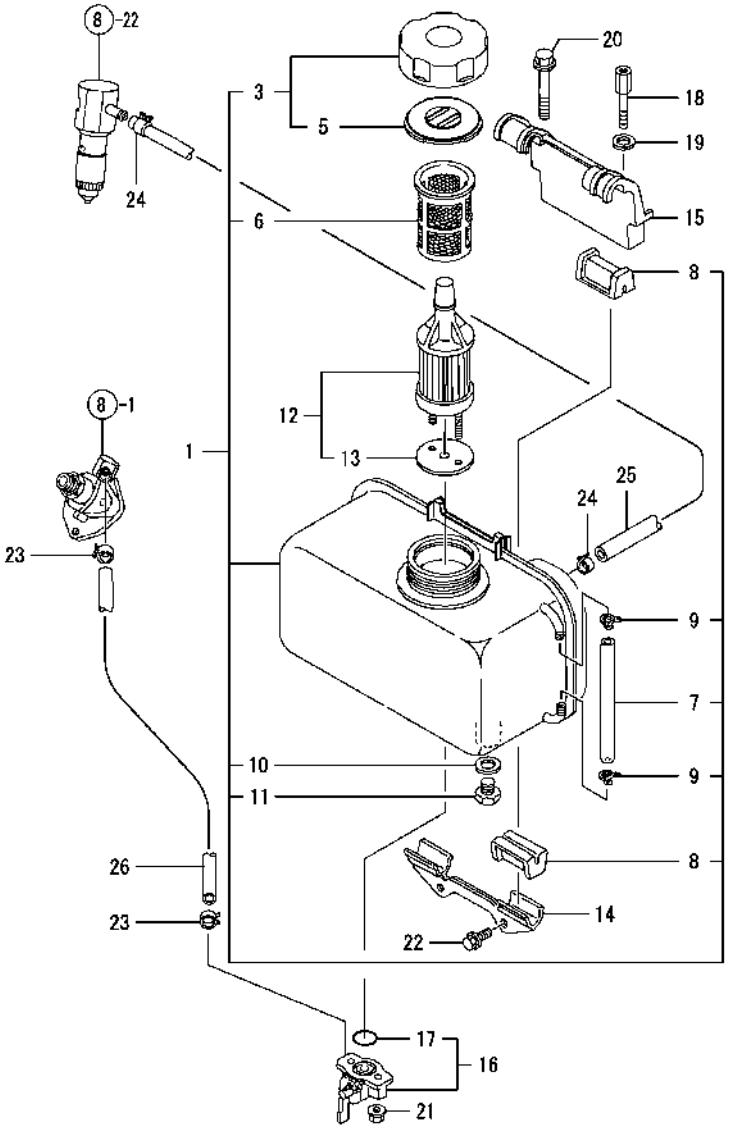

(A)=L70EE-DE15A (D)=
(B)=L70EE-DEP15A (E)=
(C)=L70EE-DEG15A (F)=

No.	Lev.	Parts No.	Description	Q'ty (A)	(B)	(C)	(D)	(E)	(F)	I	R
1	1	714350-55711	TANK ASSY, FUEL	1	1	1					
3	2	114288-55041	CAP ASSY	1	1	1					
5	3	114288-55081	VALVE	1	1	1					
6	2	114250-55100	FILTER, FUEL	1	1	1					
7	2	114350-55150	GAUGE, LEVEL	1	1	1					
8	2	114250-55201	DAMPER, FUEL TANK	4	4	4					
9	2	103854-55220	RETAINER	2	2	2					
10	2	23414-080000	GASKET, 8X1.0	1	1	1					
11	2	105300-55080	PLUG, 8	1	1	1					
12	1	114250-55121	FILTER ASSY, FUEL	1	1	1					
13	2	114250-55130	GASKET	1	1	1					
14	1	114299-55210	STAY, FUEL TANK	1	1	1					
15	1	114399-55230	STAY, FUEL TANK	1	1	1					
16	1	114250-55301	COCK ASSY, FUEL	1	1	1					
17	2	24341-000150	O-RING, 1AS15.0	1	1	1					
18	1	114650-55810	BOLT	1	1	1					
19	1	22117-080000	WASHER, 8	1	1	1					
20	1	26106-080452	BOLT, M8X 45 PLATED	1	1	1					
21	1	26366-060002	NUT, M6	2	2	2					
22	1	26476-060142	SCREW, TAPPING M6X14	2	2	2					
23	1	106990-44660	CLIP, HOSE 12.5	2	2	2					
24	1	124722-59050	CLIP, HOSE 9	2	2	2					
25	1	114250-59060	PIPE, FUEL RETURN	1	1	1					
26	1	114268-59061	PIPE, FUEL L=50	1	1	1					

N:Old ⇄(Yes/No) New, Q:Old ⇄(No/Yes) New, R:Old ⇄(Yes/Yes) New, S:Old ⇄(No/No) New, W:Add, Z:Discontinued, F:Interchangeable by set, K:Q'ty Change

Copyright (C) YANMAR CO., LTD. All RightsReserved.

Fig.10. STARTING MOTOR & DYNAMO

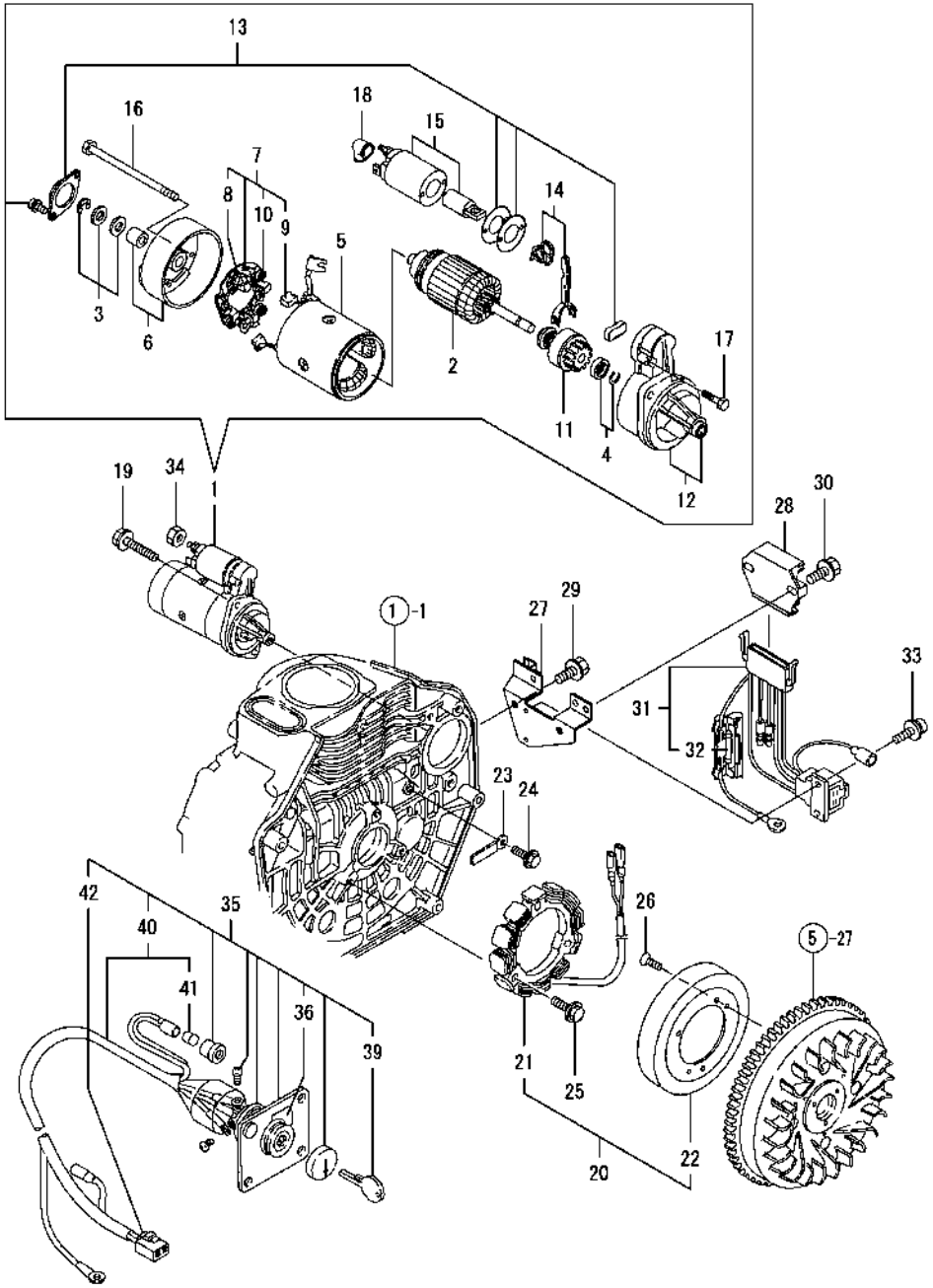

(A)=L70EE-DE15A (D)=
(B)=L70EE-DEP15A (E)=
(C)=L70EE-DEG15A (F)=

No.	Lev.	Parts No.	Description	Q'ty (A)	(B)	(C)	(D)	(E)	(F)	I	R
1	1	114362-77011	STARTER(HITACHI 12V	1	1	1					
2	2	114381-77110	ARMATURE	1	1	1					
3	2	X2114811000	WASHER KIT, THRUST	1	1	1					
4	2	X2114715500	STOPPER SET, PINION	1	1	1					
5	2	114381-77130	COIL ASSY, FIELD	1	1	1					
6	2	114381-77140	COVER, REAR	1	1	1					
7	2	114371-77160	HOLDER ASSY, BRUSH	1	1	1					
8	3	114371-79040	BRUSH (-)	2	2	2					
9	3	114371-79050	BRUSH (+)	1	1	1					
10	3	114371-79060	SPRING, BRUSH	4	4	4					
11	2	X211485016	PINION ASSY	1	1	1					
12	2	114381-77151	HOUSING ASSY, GEAR	1	1	1					
13	2	114371-77170	COVER KIT, DUST	1	1	1					
14	2	114371-77180	LEVER KIT, SHIFT	1	1	1					
15	2	124298-77020	SWITCH, MAGNETIC	1	1	1					
16	2	124195-77770	THROUGH BOLT	2	2	2					
17	2	114371-79070	BOLT M 6X 37	2	2	2					
18	2	X2114274200	COVER, TERMINAL	1	1	1					
19	1	26106-100302	BOLT, M10X 30 PLATED	2	2	2					
20	1	114351-78290	DYNAMO ASSY	1	1	1					
21	2	114351-78830	STATOR ASSY, 132.1MM	1	1	1					
22	2	114351-78840	WHEEL, DYNAMO	1	1	1					
23	1	160710-78710	CLAMP, CORD	1	1	1					
24	1	26106-060122	BOLT, M6X 12 PLATED	1	1	1					
25	1	26106-060202	BOLT, M6X 20 PLATED	3	3	3					
26	1	26577-060142	SCREW M 6X 14	3	3	3					
27	1	114385-77400	BRACKET	1	1	1					
28	1	119660-77710	LIMITER, CURRENT 15A	1	1	1					
29	1	26106-060122	BOLT, M6X 12 PLATED	2	2	2					
30	1	26106-060202	BOLT, M6X 20 PLATED	2	2	2					
31	1	114351-77540	HARNESS, WIRE	1	1	1					
32	2	29411-200000	FUSE, CARTRIDGE 20A	2	2	2					
33	1	26023-040102	SCREW, M4X10	2	2	2					
34	1	26716-080002	NUT, M8	1	1	1					
35	1	114351-77500	PANEL ASSY	1	1	1					
36	2	105198-07120	LABEL, STARTER	1	1	1					
39	2	106100-77630	KEY, SWITCH	1	1	1					
40	2	114351-77700	HARNESS, WIRE	1	1	1					
41	3	29220-083200	BULB (12V/3.4W)	1	1	1					
42	2	114351-77520	COUPLER	1	1	1					

N:Old $\xleftarrow[\text{No}]{\text{Yes}}$ New, Q:Old $\xleftarrow[\text{Yes}]{\text{No}}$ New, R:Old $\xleftarrow[\text{Yes}]{\text{Yes}}$ New, S:Old $\xleftarrow[\text{No}]{\text{No}}$ New, W:Add, Z:Discontinued, F:Interchangeable by set, K:Q'ty Change

Copyright (C) YANMAR CO., LTD. All RightsReserved.

Fig.11. TOOL,LABEL & GASKET SET

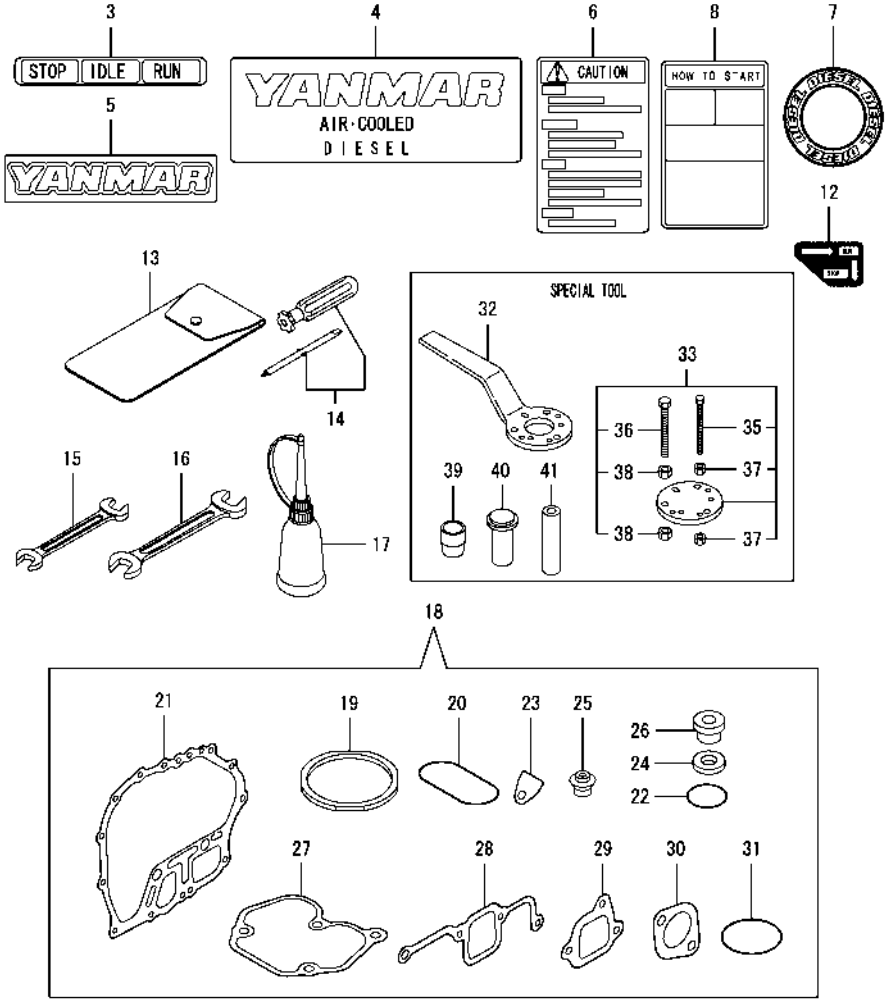

(A)=L70EE-DE15A (D)=
(B)=L70EE-DEP15A (E)=
(C)=L70EE-DEG15A (F)=

No.	Lev.	Parts No.	Description	Q'ty (A)	(B)	(C)	(D)	(E)	(F)	I	R
3	1	183250-07230	LABEL, OPERATION		1						
4	1	114250-07090	LABEL, AIR COOLED	1	1	1					
5	1	114250-07111	LABEL, YANMAR	1	1	1					
6	1	114268-07240	LABEL, CAUTION	1	1	1					
7	1	114261-07350	LABEL	1	1	1					
8	1	114268-07350	LABEL, HOW TO START	1	1	1					
12	1	183250-07480	LABEL, RUN-STOP			1					
13	1	114250-92600	BAG, TOOL	1	1	1					
14	1	160330-92730	DRIVE, SCREW	1	1	1					
15	1	28110-100120	SPANNER, 10X12	1	1	1					
16	1	28110-140170	SPANNER, 14X17	1	1	1					
17	1	28210-000150	OILER	1	1	1					
18	1	714871-92600	GASKET SET	1	1	1					1
19	2	114871-01330	GASKET SET, HEAD	1	1	1					
20	2	114350-01380	O-RING	1	1	1					
21	2	114350-01412	GASKET, CRANK CASE	1	1	1					
22	2	114299-01950	O-RING, 18	2	2	2					
23	2	114250-01841	GASKET	1	1	1					
24	2	22190-160002	WASHER, SEAL 16	2	2	2					
25	2	114350-11340	SEAL, VALVE STEM	2	2	2					
26	2	114771-11461	GASKET, NOZZLE	1	1	1					
27	2	114771-11310	GASKET, BONNET	1	1	1					
28	2	114350-12202	GASKET, AIR INTAKE	1	1	1					
29	2	114250-12211	GASKET, AIR CLEANER	1	1	1					
30	2	114250-13201	GASKET, MUFFLER	1	1	1					
31	2	103338-32570	O-RING	1	1	1					
32	1	114250-92101	F.W. LOCKING HANDLE	1	1	1					1
33	1	114250-92130	REMOVER, FLYWHEEL	1	1	1					1
35	2	26116-060454	BOLT M 6X 45 PLATED	4	4	4					1
36	2	26116-080454	BOLT, M8X 45 PLATED	3	3	3					1
37	2	26716-060002	NUT, M6	8	8	8					1
38	2	26716-080002	NUT, M8	6	6	6					1
39	1	114368-92300	GUIDE, OIL SEAL	1	1	1					1
40	1	114350-92311	INSTALLING TOOL	1	1	1					1
41	1	114350-92350	INSTALLING TOOL	1	1	1					1

Remarks
(1) OPTIONAL PARTS.

N:Old ⇄(Yes/No) New, Q:Old ⇄(No/Yes) New, R:Old ⇄(Yes/Yes) New, S:Old ⇄(No/No) New, W:Add, Z:Discontinued, F:Interchangeable by set, K:Q'ty Change

Copyright (C) YANMAR CO., LTD. All RightsReserved.

Parts No. Index

Parts No.	Fig. No.	Ref. No.
101158-11180	2	9
102100-67080	6	55
103338-32570	6	7
	11	31
103854-01221	5	25
103854-55220	9	9
104200-66820	6	40
104200-66830	6	41
104200-66850	6	42
105010-11490	2	24
105198-07120	10	36
105225-01240	1	11
105300-55080	9	11
105425-01690	1	26
105546-51020	8	2
105546-51330	8	14
106100-77630	10	39
106990-44660	9	23
114250-01800	1	30
114250-01830	1	39
114250-01841	1	40
	11	23
114250-03591	2	36
114250-03640	2	39
114250-07090	11	4
114250-07111	11	5
114250-11240	2	16
		20
114250-11600	2	27
114250-11901	2	28
114250-12211	3	1
	11	29
114250-12300	3	9
114250-12520	3	4
114250-12530	3	5
114250-12550	3	8
114250-12560	3	7
114250-12580	3	6
114250-13201	4	1
	11	30
114250-14200	5	6
114250-21550	5	26
114250-32010	6	1
114250-32070	6	6
114250-35070	6	11
114250-35110	6	10
114250-35150	1	41
114250-45301	7	7
114250-45310	7	8
114250-45330	7	9

Parts No.	Fig. No.	Ref. No.
114250-51080	8	3
114250-51160	8	10
114250-51340	8	15
114250-51600	8	17
114250-51640	8	18
114250-51650	8	19
114250-53120	8	25
114250-53331	8	32
114250-53400	8	33
114250-55100	9	6
114250-55121	9	12
114250-55130	9	13
114250-55201	9	8
114250-55301	9	16
114250-59060	9	25
114250-66050	6	31
114250-66200	6	48
114250-66440	6	34
		39
114250-76600	7	27
114250-76610	7	28
114250-92101	11	32
114250-92130	11	33
114250-92600	11	13
114261-07350	11	7
114268-07240	11	6
114268-07350	11	8
114268-59061	9	26
114270-01600	1	42
114288-13800	4	11
114288-55041	9	3
114288-55081	9	5
114299-01950	1	29
	11	22
114299-02030	1	49
114299-55210	9	14
114299-66100	6	33
114350-01200	1	8
114350-01210	1	9
114350-01220	1	10
114350-01250	1	12
114350-01380	1	19
	11	20
114350-01412	1	20
	11	21
114350-01700	1	6
114350-02100	1	24
114350-02113	1	50
114350-02200	1	56
114350-02210	1	57

Parts No.	Fig. No.	Ref. No.
114350-11120	2	8
114350-11340	2	23
	11	25
114350-12202	3	11
	11	28
114350-14450	5	8
114350-45320	7	2
114350-45340	7	3
114350-55150	9	7
114350-76591	7	24
114350-92311	11	40
114350-92350	11	41
114351-77500	10	35
114351-77520	10	42
114351-77540	10	31
114351-77700	10	40
114351-78290	10	20
114351-78830	10	21
114351-78840	10	22
114360-45101	7	6
114362-21600	5	30
114362-77011	10	1
114368-01453	1	21
114368-92300	11	39
114370-45351	7	10
114371-77160	10	7
114371-77170	10	13
114371-77180	10	14
114371-79040	10	8
114371-79050	10	9
114371-79060	10	10
114371-79070	10	17
114380-23100	5	46
114381-77110	10	2
114381-77130	10	5
114381-77140	10	6
114381-77151	10	12
114385-77400	10	27
114399-12010	3	10
114399-22300	5	40
114399-55230	9	15
114650-51100	8	4
114650-51300	8	11
114650-55810	9	18
114699-01760	1	27
114770-61190	6	30
114770-61220	6	22
114770-61520	6	27
114770-61600	6	28
114770-61610	6	29

Parts No.	Fig. No.	Ref. No.
114771-11250	2	12
114771-11260	2	13
114771-11310	2	33
	11	27
114771-11461	2	25
	11	26
114771-11470	2	26
114771-11650	2	14
114771-11660	2	18
114771-11950	2	34
114771-14260	5	7
114771-61800	6	71
114771-61820	6	72
114771-61900	6	73
114771-61930	6	74
114775-53140	8	27
114775-53210	8	28
114870-13551	4	2
114870-45201	7	1
114870-66010	6	47
114870-76530	7	15
114870-76540	7	16
114870-76560	7	18
114870-76570	7	19
114870-76580	7	20
114870-76620	7	22
114870-76630	7	23
114871-01330	1	13
	11	19
114871-11020	2	1
114871-11100	2	6
114871-11110	2	7
114871-53001	8	23
114871-59803	8	45
114871-66550	6	49
114875-53100	8	29
114880-76051	7	11
114880-76251	7	12
114880-76511	7	13
114880-76520	7	14
114880-76550	7	17
114881-21590	5	27
118200-23200	5	45
119593-53080	8	24
119593-53130	8	26
119660-77710	10	28
124195-77770	10	16
124298-77020	10	15
124550-51350	8	16
124722-59050	9	24

Parts No. Index

Parts No.	Fig. No.	Ref. No.
135210-61090	6	70
160110-02220	1	51
		52
160330-92730	11	14
160710-78710	10	23
160725-78350	6	56
160842-21150	5	54
160842-21250	5	55
160842-21260	5	56
183250-07230	11	3
183250-07480	11	12
183250-66050	6	36
183250-66070	6	37
183250-66100	6	38
183250-66301	6	61
183250-66321	6	62
183250-66331	6	63
183250-66341	6	64
183250-66351	6	65
183250-66361	6	66
183250-66371	6	67
183250-66500	6	35
183250-66511	6	60
183720-55210	7	4
22117-080000	9	19
22190-160002	1	48
	11	24
22242-000120	2	22
22252-000210	5	41
22312-030160	2	41
	6	8
22312-040080	1	55
22322-030200	6	19
		20
22351-020006	8	20
22351-030008	8	21
22351-040008	2	29
22451-060000	6	75
22512-040120	5	31
23414-080000	9	10
23876-010000	1	43
24101-062024	5	53
24162-152112	1	53
24311-000125	6	76
24341-000150	9	17
24341-000224	6	12
26023-040102	10	33
26106-060082	7	25
26106-060122	4	8
	7	26

Parts No.	Fig. No.	Ref. No.
26106-060122	10	24
		29
26106-060142	6	57
26106-060162	6	13
		68
26106-060202	6	69
	7	5
	10	25
		30
26106-060252	3	12
26106-060452	2	30
	6	45
26106-060552	2	44
26106-080122	1	54
26106-080352	1	44
26106-080452	9	20
26106-100122	1	7
26106-100302	10	19
26116-060454	11	35
26116-080454	11	36
26117-040088	6	58
26216-080182	4	9
26226-060142	3	13
26226-060182	1	45
26226-060222	1	46
26226-060552	2	31
	3	14
26306-080002	4	10
26347-060002	6	59
26366-060002	1	47
	2	32
	9	21
26367-060002	4	13
26476-060142	6	9
		46
	9	22
26554-060182	4	12
26577-060142	10	26
26696-100002	6	43
26716-060002	11	37
26716-080002	10	34
	11	38
26757-060002	6	44
26776-100002	6	54
26856-060002	2	17
		21
27310-060001	2	10
28110-100120	11	15
28110-140170	11	16
28210-000150	11	17

Parts No.	Fig. No.	Ref. No.
29220-083200	10	41
29411-200000	10	32
714250-12560	3	2
714350-55711	9	1
714350-61500	6	14
714380-23600	5	47
714380-23610	5	57
714380-23620	5	59
714380-23700	5	42
714770-61100	6	21
714870-22500	5	34
714870-28511	5	49
714871-01560	1	1
714871-92600	11	18
714872-22720	5	32
714875-51100	8	1
714875-53100	8	22
714876-21730	5	12
714878-21730	5	14
714879-21730	5	13
714880-14580	5	1
X2114274200	10	18
X2114715500	10	4
X2114811000	10	3
X211485016	10	11

Parts No.	Fig. No.	Ref. No.